September 1996

Type A Accident Investigation Board Report August 13, 1996 Electrical Shock at TRA-609, Test Reactor Area, Idaho National Engineering Laboratory

Idaho Operations Office

September 1996

Type A Accident Investigation Board Report August 13, 1996 Electrical Shock at TRA-609, Test Reactor Area, Idaho National Engineering Laboratory

Idaho Operations Office

This report is an independent product of an electrical shock accident investigation report board appointed by John M. Wilcynski, Manager, Idaho Operations Office, U.S. Department of Energy.

The board was appointed to perform a Type A Investigation of this accident and to prepare an investigation report in accordance with DOE 225.1, *Accident Investigations*.

The discussion of facts, as determined by the board, and the views expressed in the report do not assume and are not intended to establish the existence of any duty at law on the part of the U.S. Government, its employees or agents, contractors, their employees or agents, or subcontractors at any tier, or any other party.

This report neither determines nor implies liability.

On August 13, 1996, I established a Type A Accident Investigation Board to investigate the electrical shock accident at the Reactor Test Area, Idaho National Engineering Laboratory.

The Board's responsibilities have been completed with respect to this accident. The analysis process; identification of direct, contributing and root causes; and development of judgements of need during the investigation were accomplished in accordance with DOE Order 225.1, *Accident Investigations*.

I accept the findings of the Board and authorize the release of this report for general distribution.

John M. Wilcynski, Manager
Idaho Operations Office

TABLE OF CONTENTS

ACRONYMS AND INITIALISMS iii

PROLOGUE iv

EXECUTIVE SUMMARY v

1.0 INTRODUCTION 1

1.1 BACKGROUND 1

1.2 FACILITY DESCRIPTION 1

1.3 SCOPE, CONDUCT, AND METHODOLOGY 2

2.0 FACTS AND ANALYSIS 3

2.1 ACCIDENT DESCRIPTION AND CHRONOLOGY 3
2.1.1 Background and Accident Description 3
2.1.2 Chronology of Events 4
2.1.3 Emergency Response and Investigative Readiness 11
2.1.4 Medical Report 13

2.2 MANAGEMENT SYSTEMS 14
2.2.1 Policies and Procedures 15
2.2.2 Work Planning and Controls 17
2.2.3 Supervision, Management and Oversight 19
2.2.4 Training and Qualification 23

2.3 BARRIER ANALYSIS 24
2.3.1 Physical Barriers 25
2.3.2 Management Barriers 25
2.3.3 Administrative Barriers 28

2.4 CHANGE ANALYSIS 30

2.5 CAUSAL FACTORS 32

3.0 CONCLUSIONS AND JUDGEMENTS OF NEED 35

4.0 BOARD SIGNATURES 38

5.0 BOARD MEMBERS, ADVISORS AND STAFF 39

Appendix A. Delegation of Authority to Establish Type A Accident Investigation Board . . . A-1
Appendix B. Appointment Type A Accident Investigation Board B-1

FIGURES AND TABLES

Figure 2.1 TRA Switchgear Configuration 6
Figure 2.2 CFA Electrician's Work Location 8
Figure 2.3 Safety Placard (Operator Aid) 9
Figure 2.4 M-7 Drawer 10
Figure 2.5 Barrier Analysis 24
Figure 2.6 Events and Causal Factors Chart 37

Table ES.1 Conclusions and Judgments of Need vi
Table 2.1 Change Analysis 31
Table 2.2 Causal Factors Analysis 33
Table 3.1 Conclusions and Judgments of Need 35

ACRONYMS AND INITIALISMS

ATR	Advanced Test Reactor
CFA	Central Facilities Area
ID	DOE-Idaho Operations Office
INEL	Idaho National Engineering Laboratory
LITCO	Lockheed Idaho Technologies Company
MCP	Management Control Procedures
PDD	Program Description Document
PRD	Program Requirements Document
SP	Standard Practices
SWR	Site Work Release
TRA	Test Reactor Area
VAC	Volts Alternating Current

PROLOGUE

INTERPRETATION OF SIGNIFICANCE

The non-fatal, electric shock accident at Idaho National Engineering Laboratory on August 13, 1996, occurred due to failures by Lockheed Idaho Technologies Company (LITCO), the injured electrician (CFA electrician), and his immediate supervisor (Leadman). The CFA electrician was injured while working in an enclosure that contained, unknown to him, components energized by 2400 VAC. The CFA electrician did not perform zero energy checks prior to working in the enclosure, even though a somewhat unclear LITCO procedure requires that such checks be performed. The Leadman, who understood that there were energized components within the enclosure, believed that the CFA electrician also knew of these energized components. However, he did not take positive action to assure that the CFA electrician completely understood the electrical hazards present, nor did he maintain cognizant of the work being performed by the CFA electrician.

Of more concern, however, is the weakness of the LITCO work control system. The hazards evaluation did not identify the 2400 VAC hazard due to the incomplete documentation available to the planner. While the planner supplemented this documentation by discussions with the systems engineer and by a work site walk-down, significant uncertainties persisted concerning the configuration of the equipment. The planners and others who approved the work package assumed that the skills and knowledge of site electricians would mitigate any unidentified hazards associated with possible configuration differences. In the accident, the work was being performed by a loaned electrician who was unfamiliar with the equipment, and this assumption proved to be unfounded. In addition, the planned work sequence was not always followed, so even the partial effectiveness of the work plan was further weakened by a failure to implement it. There was not evidence that responsible line managers understood either the inadequacies of the plan or the degree to which actual work deviated from that planned. Throughout all stages of this job, the work control system failed to provide the sound safety underpinning for job performance that was needed.

Overall, this accident highlights the importance of a closely integrated work control system that provides effective work planning, ensures implementation of those plans, monitors job performance, and acts quickly to resolve identified weaknesses. It also points out the necessity for line management to exercise ownership of work planning, control and practices within their programs.

EXECUTIVE SUMMARY

INTRODUCTION

An electrical shock accident at Idaho National Engineering Laboratory (INEL), Test Reactor Area Building 609, was investigated in which an electrician on loan from the Central Facilities Area received an approximately 1400 VAC shock. In conducting its investigation, the Accident Investigation Board used various analysis techniques including barrier analysis, change analysis, and event and causal factor analysis. The Board inspected and photographed the accident site, reviewed events surrounding the accident, and conducted extensive interviews and document reviews to determine the factors that contributed to the accident. Relevant management systems were evaluated, in accordance with the applicable Guiding Principles of Safety Management, that could have contributed to the accident.

ACCIDENT DESCRIPTION

On August 13, 1996, at approximately 12:49 PM, a Lockheed Idaho Technologies Company (LITCO) electrician received an electrical shock while modifying a 2400 VAC electrical switchgear cabinet in Test Reactor Area Building 609 of the Idaho National Engineering Laboratory (INEL). The accident occurred when the CFA electrician, working from an inadequate work package, without complete understanding of job hazards, and out of the line of sight of his supervisor, received an electrical shock from an energized 2400 VAC component that he believed was not energized.

CAUSAL FACTORS

The **direct cause** of the accident was the lack of effective work control.

Root causes of the accident were: (1) management did not ensure that an effective management control system was in place to develop and implement adequate work controls; (2) a lack of clarity and training concerning the supervisory responsibilities of the Leadman led to inadequate supervision of the CFA electrician; and (3) the CFA electrician did not understand that there were energized components in the enclosure.

Contributing causes of the accident were: (1) LITCO did not mitigate legacy configuration control weaknesses with good work planning; (2) some LITCO managers do not have a clear understanding of their roles, responsibilities, and authorities in electrical safety; (3) ID and LITCO have not taken the steps necessary to complete corrective actions in a timely manner and confirm that corrective actions were effective; and (4) there is no clear delineation of the “skill of the craft” used as a substitute for explicit safety requirements in SWRs.

CONCLUSIONS AND JUDGEMENTS OF NEED

Table ES.1 presents the conclusions and judgements of need determined by the Board. Conclusios of the Board are those considered significant and are based upon facts and pertinent analytical results. Judgments of need are managerial controls and safety measures believed by the Board to be necessary to prevent, reduce the probability, or mitigate the severity of a recurrence of this type of accident. They flow from the causal factors and are directed at guiding managers in developing follow-up actions.

TABLE ES.1 Conclusions and Judgments of Need

Conclusions	Judgements of Need
High risk activities require that all exposed personnel have full knowledge of hazards to be encountered. Actions preceding this accident did not assure that all personnel were adequately informed.	LITCO needs to provide increased assurance that exposed personnel are informed of hazards.
LITCO does not have a comprehensive program in place to ensure electrical workers are "qualified" prior to commencing field work.	LITCO needs to assure that those involved in work package planning, approval, and execution know and understand "qualified" as described in PRD-1 and 29 CFR 1910.
LITCO zero energy verification practices are inadequate to ensure protection from hazardous electrical energy. Management expectations concerning when zero energy verifications are performed are not always understood or implemented by craft workers.	LITCO needs to clarify site expectations for zero energy verifications. The formal requirements need to be more specific and emphasis needs to be placed on communicating these requirements to workers.
"Skill of the craft" is undefined and management/planner expectations are different from those of craft personnel. Further, some have extended "skill of the craft" to include site-specific procedures and systems knowledge that cannot be reasonably expected in loaned craftsmen.	LITCO needs to clearly define expectations with regard to "skill of the craft" in both work control procedures and craft training. LITCO also needs to clearly identify site and job-related skills and knowledge that may be beyond "skill of the craft" expectations as an integral part of work planning.
As part of a DOE-wide legacy issue, as-built drawings and vendor data for older equipment at INEL cannot be accepted as current, especially for non-nuclear/industrial facilities.	LITCO needs to assure that risk-based compensatory requirements are defined and implemented to compensate for this vulnerability.

Conclusions	Judgements of Need
Roles and responsibilities are not clearly defined for work control. As a result, this work was inadequately planned and was not executed according to the plan. Further, the lack of a single approving authority for the SWR decreases management ownership and the resulting management oversight.	LITCO needs to revise and amend their program control documentation to more clearly delineate the roles, responsibilities, and authorities of each manager, supervisor, and worker, and communicate them. LITCO needs to revise review and approval procedures to assure that one manager assumes primary ownership of each work package. LITCO needs to assure that the level of management review and approval is commensurate with the risk accepted.
Management performance monitoring and oversight systems at LITCO, ID, and DOE Headquarters have identified significant deficiencies in management control systems. However, the external reports were distributed by ID as "Information Only" without specific action required.	LITCO needs to increase management attention and emphasis on correcting identified deficiencies. ID needs to ensure that effective actions are identified, achievable milestones are agreed upon, that LITCO completes milestones within the agreed schedule, and that completion of agreed actions is verified.
Delay in publishing PRD-108, *Work Control* and inadequate specificity in PRD-25, *Hazard Evaluations* , and other lower tier procedures contributed to the inadequate work control responsible for this accident.	LITCO needs to place increased emphasis on compiling guidance for work controls, hazard evaluations, and work packages to ensure that appropriate safety requirements are integrated into work control documents and implemented in the field.

Type A Accident Investigation Board Report on the August 13, 1996, Electrical Shock at Test Reactor Area Building 609, Idaho National Engineering Laboratory

1.0 INTRODUCTION

1.1 BACKGROUND

On August 13, 1996, at approximately 12:49 PM, a Lockheed Idaho Technologies Company (LITCO) electrician received an electrical shock while modifying a 2400 VAC electrical switchgear cabinet in Test Reactor Area Building 609 of the Idaho National Engineering Laboratory (INEL). The injured electrician was transported to the InterMountain Burn Center at the University of Utah in Salt Lake City, Utah, after being examined at the Central Facilities Area Medical Dispensary at INEL and the Columbia Eastern Idaho Regional Medical Center (CEIRMC) in Idaho Falls, Idaho. The electrician was discharged the following day, though he continued to experience headaches, dizziness and disequilibrium that gradually diminished in severity. Physical therapy continues for arm weakness and shoulder soreness. Prognosis for full recovery is good, but residual right arm weakness may remain. Visible scars will also develop where he received third degree burns.

On August 13, 1996, a LITCO electrician received a non-fatal electrical shock.

On August 14, 1996, Tara O'Toole, M.D., M.P.H., Assistant Secretary for Environment, Safety and Health, U.S. Department of Energy (DOE), delegated authority to John M. Wilcynski, Manager, Idaho Operations Office (ID) to form an investigative board for this accident. On the same date, John M. Wilcynski established a Type A Accident Investigation Board to investigate this accident in accordance with DOE 225.1, *Accident Investigations* (See Appendix A).

On August 14, 1996, a Type A Accident Investigation Board was appointed.

1.2 FACILITY DESCRIPTION

INEL is located on 890 square miles of desert in a rural, sparsely populated section of southeastern Idaho. INEL's mission is to integrate engineering, applied science, and operations in an environmentally conscious, safe, and cost-effective manner to solve problems relating to the environment, energy production and use, U.S. economic competitiveness, and national security.

The Test Reactor Area (TRA) contains research reactors, reactor fuel storage areas, laboratories, and area and site support systems. In particular, TRA-609, where the accident occurred, is a facility that provides TRA-wide compressed air support.

1.3 SCOPE, PURPOSE, AND METHODOLOGY

Due to Departmental concern regarding electrical accidents and incidents, the Board was directed to widen its focus beyond this accident.

This accident did not result in a fatality or extended hospitalization and did not include significant property damage. Therefore, considered alone, the accident does not require a Type A accident investigation. However, there has been a heightened concern in the Department regarding electrical accidents due to an unacceptably high occurrence rate. The Departmental concern led to an April 1996 memorandum from the Deputy Assistant Secretary for Oversight highlighting electrical shock events as a significant issue complex-wide and recommending that managers review all planned and ongoing work to ensure proper working level implementation of electrical safety. INEL experienced seven reportable electrical safety incidents in the period of June - August 1996 that included three near-misses, culminating in this accident. In consideration of these factors, a Type A Accident Investigation Board was formed. The Board was charged with reviewing and analyzing the circumstances surrounding this accident to determine the cause(s) or probable cause(s), and to evaluate the effectiveness of ID and LITCO safety management systems in preventing the recurrence of similar or more serious electrical accidents. In addition, the Board was also directed to focus on other recent electrical incidents at the INEL, management roles and responsibilities, application of lessons learned from similar type accidents within the Department, and work planning, practices, and procedures.

The Board began its investigation on August 15, 1996.

The Board began its investigation on August 15, 1996, completing the investigation and submitting its final report to the ID Manager on September 11, 1996. During the investigation, the Board inspected and photographed the accident scene, reviewed documentation presented by LITCO, reviewed the critical events leading to the accident, reviewed the emergency response, conducted extensive interviews with appropriate individuals and performed causal analysis. The Board evaluated the adequacy of ID's and LITCO's overall safety management system and LITCO's work control and planning practices. Based on analysis of these data, the Board identified judgments of needs for corrective actions to prevent recurrence of this accident and the other electrical incidents reported over the past three years (and especially over the past two months) at INEL. This investigation report will inform the DOE community of lessons

learned to promote program improvement across the Department and to reduce the potential for similar accidents at INEL and elsewhere.

2.0 FACTS AND ANALYSIS

2.1 ACCIDENT DESCRIPTION AND CHRONOLOGY

2.1.1 Background and Accident Description

At INEL, CFA craft workers may be loaned to other areas to provide assistance on a short-term basis.

LITCO assumed the role of the INEL management and operating contractor on October 1, 1994. After the contract was awarded, LITCO continued to use a matrix management approach to perform certain functions. In particular, crafts personnel from the Central Facilities Area (CFA) are available to other INEL facilities to help meet peak maintenance workloads. In this case, the injured electrician is assigned to Facilities/Utilities/Maintenance Craft Support that primarily performs work in the CFA. At the time of the accident, this individual was assisting the TRA in completing electrical maintenance activities undertaken in conjunction with a two-week Advanced Test Reactor (ATR) scheduled outage, in accordance with the LITCO matrix management approach in electrical maintenance.

The injured electrician was a loaned CFA worker.

The injured electrician, hereafter referred to as the CFA electrician for clarity, is a full-time employee of LITCO, with the rating of First Class Electrician. He informed the Board that his experience consists of about 30 years in the electrical and maintenance fields. He has been a LITCO employee for approximately three years and is represented by the Oil, Chemical, and Atomic Workers International Union local at INEL. Co-workers and management of the CFA electrician consider him to be a serious, careful electrician with demonstrated ability in safely performing electrical work.

Work being performed when the accident occurred was associated with the installation of a new air compressor in TRA-609.

A scheduled two-week maintenance shutdown for the ATR began Sunday, August 11, 1996. Maintenance work began on August 12. Maintenance work to be performed during this shutdown included major electrical system work in the ATR building and a major effort planned for the TRA Utility Area to install a new site air compressor and associated power and control cables. The accident occurred on August 13, 1996, in Building 609 of the TRA (TRA-609) during the performance of this latter activity. The CFA electrician was working as part of a two-person team made up of a TRA Maintenance Organization electrician as Leadman and the CFA electrician. The team was performing work on an electrical switchgear consisting of supply circuit breakers for the three site air compressors, the transformers supplying power to the compressor control circuitry, the

associated circuitry for the compressor circuit breakers, and circuit breakers feeding other TRA loads.

At about 11:15 AM, the CFA electrician was working out of sight of the Leadman while the Leadman reviewed system drawings. The CFA electrician removed a cover from one of the potential transformer enclosures assuming that the 2400 VAC bus had been de-energized. Following lunch, work was resumed, with the CFA electrician working behind and above the switchgear assembly and the Leadman working in front of the assembly. At approximately 12:49 PM, the CFA electrician reached through the opening in the top of the potential transformer enclosure (created earlier when the panel was removed) to clip some small wires. The CFA electrician's right lower forearm, near the wrist, contacted one phase of the energized 2400 VAC bus, resulting in a severe shock. He cried out, retained consciousness momentarily, then blacked out. He was apparently thrown backwards by the effects of the electrical shock, resulting in a fall of about five and one-half feet from the top of the switchgear cabinet to the concrete floor below. He received a laceration to the back of the head and a concussion from this fall. Responders supplied appropriate medical support, including immediate attention to the head laceration and subsequent transportation to medical treatment facilities.

The accident occurred when the CFA electrician, working out of the line of sight of his supervisor, received an electrical shock from an energized 2400 VAC component.

2.1.2 Chronology of Events

Work being performed when the accident occurred was being conducted under Site Work Release (SWR) AM279, *Install New 609 M-8 Air Compressor Power and Control Cable*. This SWR was reviewed by safety personnel and release for start work was granted by the TRA Utility Area Supervisor on August 1, 1996. In addition to the installation of the new M-8 air compressor with its associated power and control cable work, this SWR also involved upgrades and modifications to the control circuits of the other main site air compressors, M-6 and M-7.

August 1, 1996

Some SWR AM279 work had been approved for the period preceding the planned outage. A formal pre-job briefing for those work elements only was conducted on August 1, 1996, by a designated TRA pre-job briefer in accordance with TRA Standard Practice 10.3.1.28. The briefer annotated in SWR AM279 that this briefing had included only the limited number of steps approved for the time before the planned outage. The TRA Leadman for SWR AM279 attended this brief, however, as noted above, it covered only a small

Work leading up to the accident began on August 1.

portion of the work package. There was no other formal pre-job briefing in accordance with SD 10.3.1.28 before August 13, the date of the accident, that included the remainder of the work elements in the SWR.

August 5 and August 8, 1996

On both August 5 and August 8, some SWR AM279 work in addition to that briefed on August 1 was done without formal review and approval of work sequence changes and without a formal pre-job briefing. The workers doing this work listed themselves on the briefing sheet used for the August 1 briefing.

Additional work was performed on August 5th and August 8th.

August 12, 1996

On the morning of Monday, August 12, 1996, the CFA electrician reported to TRA from the CFA crafts pool to augment the normal TRA craft workforce for start of the planned outage. He was assigned by the TRA Electrical Foreman to work under the TRA Leadman on SWR AM279.

The CFA electrician reported to TRA on the morning of August 12th.

No formal pre-job briefing addressing the complete scope of work, tagout/lockouts, hazards, and other topics was provided to the CFA electrician as required by TRA Standard Practice 10.3.1.28 and, more specifically, by SWR AM279. He was provided a general briefing by the Leadman consisting of a discussion of the basic scope of what was to be accomplished. The CFA electrician listed himself on the briefing record sheet used to record the August 1, 1996, briefing.

The required pre-job briefing, including a briefing on hazards, was not given.

As noted above, the Leadman had also not received a formal pre-job briefing for the work to be accomplished. Therefore, neither the Leadman nor the CFA electrician received a briefing containing the essential elements required in a formal pre-job briefing for the work they were to do on August 12 and 13. During the remainder of August 12, the CFA electrician worked with the Leadman on preparations for entering the switchgear in TRA-609 the following day.

9:00 AM - 11:15 AM, August 13, 1996

On August 13, the lockout/tagout of the air compressor switchgear in TRA-609 was completed about 9:00 AM. However, this lockout/tagout only involved the de-energizing of the 2400 VAC bus servicing the M-6 and M-8 compressors; the M-7 compressor is supplied from/connected to a separate bus (See Figure 2.1). The bus supplying the M-7 compressor remained energized to maintain power

Planned lockout/tagout was performed, leaving the M-7 bus energized.

to other electric loads including the demineralized water supply pumps for the ATR and the ATR Canal, and for TRA area and perimeter lighting. This was considered acceptable since the limited work to be performed related to the M-7 compressor was intended to be done by opening only the potential transformer drawer, leaving intact the physical barriers limiting access to the energized 2400 VAC bus.

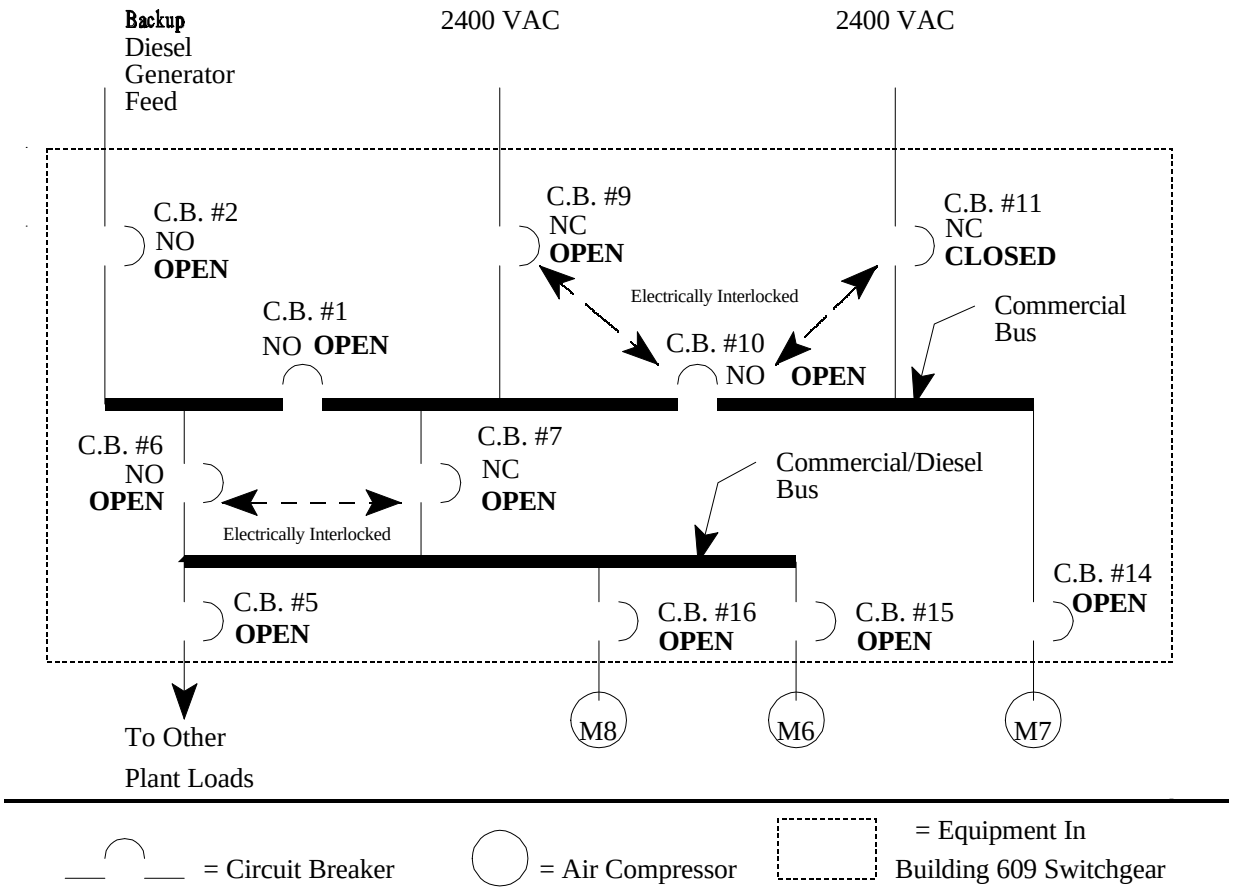

Figure 2.1 TRA Switchgear Configuration
(**Bold** indicates conditions at the time of the accident.)

After the tagout/lockout was completed, the Leadman, assisted by the CFA electrician, pulled out the three potential transformer drawers in the back of the switchgear. At this time it became clear to both workers that the M-7 drawer was significantly different in construction from the M-6 and M-8 drawers. The potential transformers for M-7 were contained in a tilt-out drawer instead of a pull-out drawer. The tilt-out drawer performed the same safety functions as the pull-out drawers for M-6 and M-8, disconnecting the potential transformers from the main 2400 VAC bus and grounding the potential transformers when tilted out. However, the potential transformers from the M-7 tilt-out drawer precluded access to the

Upon opening the potential transformer drawers, they discovered that the M-7 drawer was different from the other two.

components to be worked on, even with the M-7 drawer fully tilted out. Access could only be gained through the top of the tilt-out drawer enclosure where energized 2400 VAC bus components became exposed. This difference in access was not noted by the Leadman. In addition, in interviews with the Board, he stated that he was primarily focused on the procedure and the prints and was concerned about the tight schedule for completing the work. The Leadman stated that he perceived that the job was on a tight schedule because of a misunderstanding that occurred during an earlier conversation with the Utility Area Controller regarding the progress expected during the day. No job hold was initiated by the Leadman to confer with the planner or the system engineer about the differences in the drawers.

The M-7 drawer construction precluded access to the components to be worked on.

Initially, work centered on the new M-8 installation. After pulling out the drawers for M-6 and M-8 and tilting out the drawer for M-7, the Leadman removed the panel cover from above the M-8 potential transformer drawer to perform a zero energy check and then to do the M-8-related work. He conducted a zero energy check on the 2400 VAC bus supplying M-6 and M-8, confirming zero energy. The M-7 2400 VAC supply bus was not de-energized at this time.

Initial work centered on the M-8 enclosure.

The CFA electrician stated that he thought that all three compressors were powered from the same bus - the bus de-energized by the lockout/tagout. The TRA Utility Area Controller, who had participated in the tagout/lockout, reminded the Leadman that the M-7 2400 VAC bus was still energized. The CFA electrician was standing nearby, but not closely following the conversation. The Leadman and Utility Area Controller both believed that the CFA electrician had heard and understood the warning. However, neither the Leadman nor the Utility Area Controller checked to ensure that the CFA electrician had heard and understood the warning. The CFA electrician informed the Board that he does not remember hearing this warning. The CFA electrician, having received insufficient information concerning the switchgear during a pre-job briefing and not closely following the conversation between the Leadman and the Utility Area Controller, assumed that power for the M-7 compressor also came from the bus feeding M-6 and M-8, now confirmed to be de-energized.

The CFA electrician thought that the lockout/tagout that had been performed also ensured zero energy in the M-7 enclosure.

For most of the remainder of the morning, the Leadman and the CFA electrician worked together on changes and upgrades to the M-8 control circuits. To facilitate the more extensive work on the M-8 circuits, the work on the potential transformers in the M-8 pull-out drawer was accomplished by the Leadman and the CFA electrician through the opening provided by the removed top cover, since access

from the top was less restricted. The CFA electrician stated that it was his impression that removing the covers over the drawer enclosure and working from the top was intended for all three potential transformer drawers.

11:15 AM - 12:45 PM, August 13, 1996

At about 11:15 AM, concern was expressed by the Utility Area Controller that the temporary, portable air compressor might be having overheating problems. The Utility Area Controller asked what could be done to restart one of the site air compressors quickly, if necessary. The Leadman informed the Utility Area Controller that it would be difficult to restore M-6 or M-8 quickly. He indicated that he would expedite the M-7 work, since there was limited work to do and the M-7 compressor could be returned to service more quickly than the other two. The Leadman went to the other side of the switchgear to look at prints, and the CFA electrician went around to the back of the switchgear to start the work in the M-7 potential transformer drawer (See Figure 2.2).

At about 11:15 AM, the Utility Area Controller asked what could be done to restart one of the air compressors quickly.

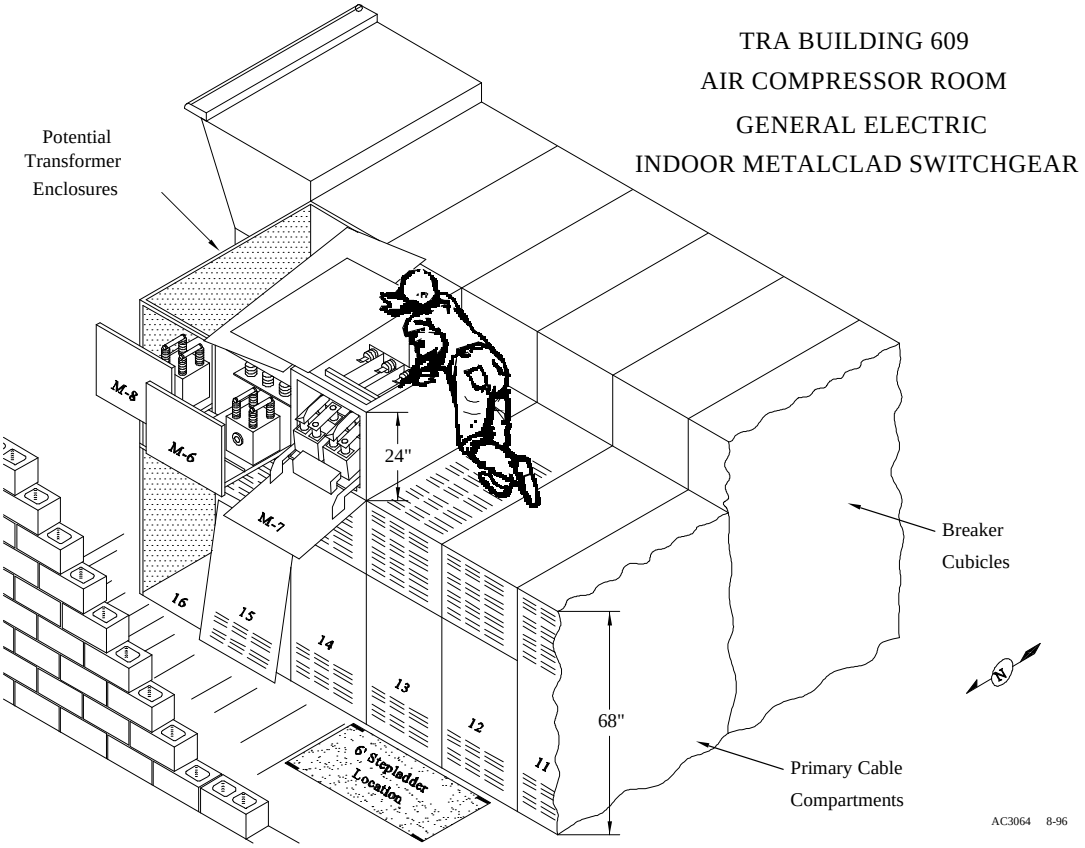

Figure 2.2 CFA Electrician's Work Location

During a post accident interview, the CFA electrician did not clearly recall exactly what he did at this time and noted that the accident had left him a bit confused over the exact sequence of events. No one else was in a position to monitor his actions closely, but the following sequence is believed to be an accurate reconstruction, based on interviews with the CFA electrician and the Leadman.

In an effort to expedite placing the M-7 compressor back in service, the CFA electrician removed the enclosure cover, exposing energized electrical components.

The CFA electrician used a ladder to climb on top of the adjacent enclosure and then removed the cover from above the M-7 drawer. A red danger placard on the front of the M-7 drawer, not visible from the CFA electrician's position, indicated that work should not be performed on components in this drawer unless the 2400 VAC bus had been de-energized by opening, racking out and tagging out/locking out two particular breakers (See Figure 2.3). The CFA electrician stated that he did not notice this warning. The CFA electrician stated that he had noted earlier that access to the required components was not available through the tilted M-7 drawer. He stated that he recalled talking about it to the Leadman and informing him that removing the cover over the M-7 drawer space would be required. The Leadman does not recall this conversation. Removing this cover removed a crucial safety barrier and allowed direct access to energized 2400 VAC bus components in the area under the removed cover.

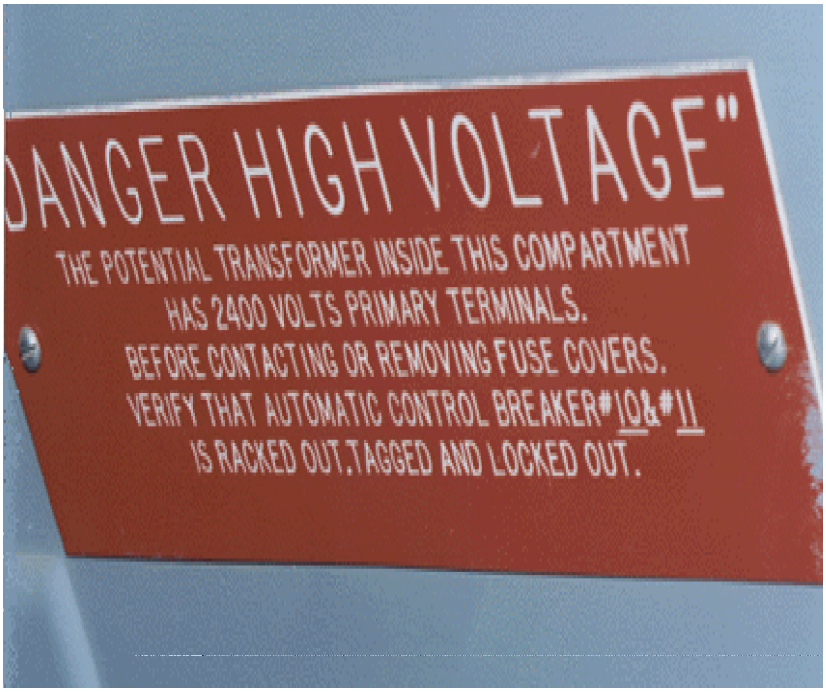

Figure 2.3 Safety Placard (Operator Aid)

About 11:45 AM, both men went to lunch. They did not spend the entire lunch break together, and progress on the job was not discussed.

12:45 PM - 12:49 PM, August 13, 1996

Upon their return from lunch about 12:45 PM, the Leadman continued his work in the front of the switchgear and the CFA electrician returned alone to the back of the switchgear to complete the work on the M-7 drawer. The CFA electrician thought that the 2400 VAC bus supplying M-7 was de-energized and tagged out. He did not recognize the three large flat metal "stabs" in the back of enclosure (that mate up with similar stabs on the drawer when fully inserted) as electrical components connected to the main bus by cable (See Figure 2.4).

Following lunch, the CFA electrician returned alone to the back of the switchgear to complete the work on the M-7 drawer.

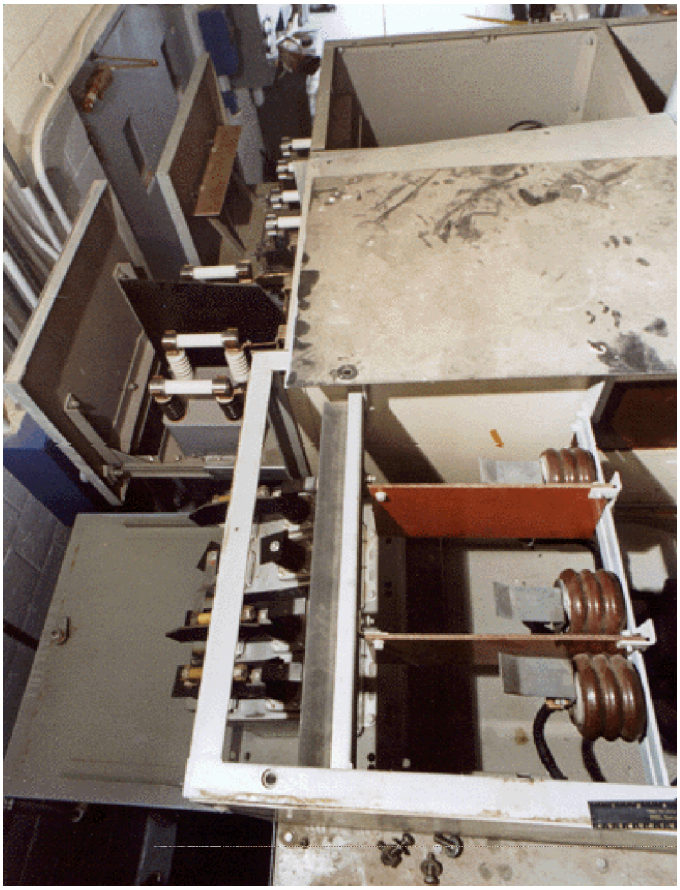

Figure 2.4 M-7 Drawer

At approximately 12:49 PM, as he reached in from the top of the enclosure to clip some small wires in the M-7 drawer, the CFA electrician's right forearm, near the wrist, contacted a phase stab on the energized 2400 VAC bus (calculated at 1385 VAC phase to ground). He received a severe electrical shock that physical evidence indicates was primarily grounded through his right elbow to the cabinet frame. He immediately cried out, briefly retained consciousness, and then blacked out.

As he reached in to clip some wires, his forearm contacted a high voltage component.

The effects of the electrical shock apparently caused him to fall off the top of the switchgear cabinet to the concrete floor below, a fall of about five and one-half feet. As a result of this fall, he suffered a laceration to the back of the head and a concussion. He regained consciousness shortly afterwards.

The effects of the electrical shock caused him to fall to the floor.

2.1.3 Emergency Response and Investigative Readiness

The emergency response began when the Leadman heard the Injured Electrician's cry and a banging noise. The Leadman ran around to the back of the switch gear, where he found the Injured Electrician lying on the floor, conscious and able to speak. The Leadman ran outside to summon help and then called the site's general emergency number from the adjoining office, since no telephone was available in the immediate area. The CFA Fire Department Alarm Room received the call and dispatched emergency response vehicles (a fire truck and an ambulance) from the CFA. A second fire truck was at a training field, closer in proximity to the accident scene. This unit heard the radio dispatch, responded and arrived at the accident scene in approximately four minutes with Emergency Medical Technicians (EMTs). The TRA Facility Fire Protection Engineer, who is a trained First Responder for medical emergencies, also heard the call on his radio, arrived at the accident scene before the fire truck, and found the CFA electrician sitting on the floor holding his right forearm, which was burned. A bleeding laceration was also noted on the back of his head. The First Responder was concerned about entering the space behind the electrical cabinets where the CFA electrician was and asked the CFA electrician to move himself toward the First Responder, which he did. The First Responder and co-workers were unable to immediately find a first aid kit within the building, but subsequently found a kit in the next building (TRA-608). Since the first aid kit was permanently mounted to the wall, the contents were removed from the kit and hand-carried to the accident scene. No medical barrier (latex) gloves were found among the kit's contents.

The emergency response began almost immediately, providing required first aid and transporting the CFA electrician to the hospital.

Three LITCO Security Police Officers at the TRA heard the emergency radio dispatch, responded and were next to arrive at the

accident scene. The security personnel assisted the CFA electrician in moving from behind the electrical cabinets. One security officer had a belt pack containing medical barrier gloves, which he donned and used to apply pressure with a gauze sponge to the bleeding laceration on the back of the CFA electrician's head. The nurse stationed at the TRA Medical Dispensary arrived next by foot and took over first aid. Eight minutes after the radio dispatch, the ambulance arrived with additional EMTs and the nurse from CFA Medical Dispensary. The CFA electrician was transported by ambulance to the CFA Medical Dispensary. En route, he was tended by the nurse and EMTs, who started an intravenous line and applied saline compresses to the electrical burns.

When the ambulance arrived at the CFA Medical Dispensary, the LITCO on-call physician entered the ambulance, evaluated the medical condition of the CFA electrician, and ordered the ambulance driver to transport the CFA electrician to CEIRMC, approximately 50 miles away in Idaho Falls. A nurse and an EMT accompanied the CFA electrician during the 49 minute ambulance transport to the center.

Investigative Readiness

ID and LITCO took prompt and effective actions to preserve the accident scene and to prepare for the investigation.

ID and LITCO personnel took prompt, appropriate and effective actions to preserve the integrity of the accident scene and prepare for the accident investigation. The following investigative readiness actions were key to support the investigation:

- Security personnel who had responded to the emergency call immediately secured the accident scene following the evacuation of the CFA electrician.

- Both the LITCO Safety Engineer and the ID Facility Representative immediately took detailed photographs of the accident scene; they made all photographs available to the Board in a timely fashion. A videotape of the accident scene was also made.

- The LITCO Deputy Operations Manager from the Advanced Test Reactor took charge of the accident scene so a clear line of accident scene management was established.

- The ID Facility Representative and LITCO Supervisor of Operations collected and accounted for all evidence (e.g., drawings, voltage tester and work request/package) that was in use by the CFA electrician at the time of the accident.

- The Emergency Control Center and the CFA Fire Department Alarm Room logs, including a list of all personnel notifications and times of significant events, were provided to the Board in a timely manner.

- Written statements of all personnel present in the immediate area were completed in a timely manner to minimize the opportunity for witnesses to discuss the accident and otherwise taint their personal perspective.

- An initial briefing was provided to the Board by LITCO management on August 16, 1996 after all of the members of the Board had assembled. The Board was presented with all of the physical evidence collected at the accident scene. Based upon the initial photographs, the Board elected to have additional detailed photographs taken.

- All personnel contacted by the Board for interviews were cooperative and professional.

The Board found that the investigative preparedness of both ID and LITCO met the requirements contained in DOE 225.1, *Accident Investigations*.

2.1.4 Medical Report

Information about the CFA electrician's wounds and treatment were obtained through interviews with the CFA electrician, examination of his injuries, discussions with his treating physicians and review of medical records.

The CFA electrician suffered electrical burns, a head laceration, and a concussion.

The CFA electrician was initially evaluated and treated in the CEIRMC emergency department by an emergency physician. He was found to have two types of injuries: high voltage electrical injuries, including burns to the right forearm and other locations, and head injuries due to a fall. The most severe burn was a twelve centimeter long third degree burn on the back of the right wrist and forearm. Within the lower part of this burn was a depression one centimeter wide and one centimeter deep. The remainder of the burn was more shallow. Third degree burns of lesser depth and severity were distributed on the inner aspect of the right elbow and below the left nipple. Second degree burns were present on the palmar side of the left hand. The CFA electrician also experienced muscle jerks, tingling, numbness and weakness in the right hand and arm, as well as soreness of the right shoulder. Distributions of electrical injuries are consistent with current entering the right lower forearm at a point of contact

with the energized bus stab. Current flowed through the right forearm, with most of the current exiting the arm at the inner aspect of the right elbow, where the arm was in contact with the edge of the grounded electrical equipment cabinet. A smaller amount of current traveled up the arm to the trunk and exited where the left chest and left arm were in contact with the electrical equipment cabinet.

Head injuries sustained in the fall consisted of a 3 - 4 centimeter laceration to the back right portion of the scalp and a concussion. Laboratory tests and X-rays of injured areas did not detect any other Internal injuries. A urine sample obtained within a few hours of the accident was negative for controlled substances. Initial treatment consisted of dressing the burns with saline-soaked gauze and closure of the scalp laceration with four staples. The emergency physician conferred with a Columbia Eastern Idaho Regional Medical Center plastic surgeon specializing in burns. The plastic surgeon recommended that the injured Electrician be transferred to InterMountain Burn Center at the University of Utah, Salt Lake City, Utah, because of the possible need for surgical treatment of the burn injuries. The CFA electrician was subsequently transported by aircraft to the InterMountain Burn Center. Transport took approximately two hours and twenty minutes.

At the InterMountain Burn Center, the CFA electrician was observed overnight and discharged the following day. In the days following discharge, he suffered from headaches, dizziness and disequilibrium that gradually diminished in severity. Arm weakness and shoulder soreness persisted and was treated with physical therapy. Prognosis for full recovery is good, but residual right arm weakness may remain. Visible scars will also develop at the locations of the third degree burns. An interview of the CFA electrician and review of his medical records revealed no apparent physical or mental impairments that would have contributed to the accident, such as fatigue, poor vision, metabolic disorders, seizure disorders or substance abuse. The CFA electrician had been medically cleared for the type of work that he was doing. He said that a tragic loss had recently occurred in his family, but he stated that he was not distracted or preoccupied on the day of the accident.

The CFA electrician was discharged the next day, with a good prognosis for full recovery.

2.2 MANAGEMENT SYSTEMS

A review of ORPS data since April 1993 indicates that INEL has experienced a rate of electrical safety incidents approximately 50 percent higher than the DOE average. More detailed examination of ORPS incidents since January 1994 shows that INEL has identified management systems as a cause in 41 percent of electrical incidents,

INEL has experienced a high rate of electrical safety incidents, with many caused by management weaknesses.

in contrast to 8 percent DOE-wide for similar incidents. Other reviews, internal and external to INEL, have also identified significant safety management concerns. This section examines the ID and LITCO management policies and procedures, work controls, management and oversight activities, and training and qualification programs in light of this accident and in the broader context of the many recent electrical safety incidents.

2.2.1 Policies and Procedures

The Electrical Safety Committee has broad responsibilities for site-wide electrical safety policy and training.

The INEL Electrical Safety Committee, a diverse group of electrical representatives from across the site, serves as the Authority Having Jurisdiction for INEL and is primarily responsible for electrical safety policy. This committee is responsible for the development and modification of PRD-1 electrical safety policy, as well as electrical safety training programs. It has a formal charter prescribing its roles in addressing electrical safety issues.

LITCO has published local health and safety policies.

Identification of mandatory electrical safety standards and the expectation for compliance with these requirements are effectively transmitted from DOE to LITCO through the existing contract. ID and LITCO have established local policy for safety and health in two policies:

- The LITCO *Safety and Health Policy*, dated March 20, 1996, that defines management and employee responsibility for safety; and,

- The *INEL Site Workplace Safety Policy*, dated April 1995, that lists the rights of workers regarding safety and health while at INEL.

LITCO has also published a number of procedures to implement policy.

Procedures, requirements and responsibilities for implementing these two policies are contained in LITCO documents. Requirements and procedures most relevant to electrical safety are:

- *Electrical Safety*, PRD-1, that sets electrical safety standards, requires work orders containing electrical requirements to be reviewed by designated safety professionals;

- *Overview of the LITCO Safety and Health Program*, PDD-16, which assigns safety and health roles and responsibilities to LITCO managers, employees, and safety and health staff. Electrical safety responsibility is assigned to line management by this document;

- *Safety Review*, PRD-25, that outlines procedures for hazards evaluation and the safety review process.

- *Test Reactor Area Work Order Control and Scheduling System*, SP 10.3.1.32 of 6/12/96 that contains procedures to identify, initiate, plan, approve, schedule, coordinate, perform and review work orders.

- *Lockouts and Tagouts*, MCP-1059, that outlines lockout and tagout procedures.

Collectively, these procedures describe the work control system. The system establishes few specific, detailed requirements for the content of the SWR, allowing it to be tailored to specific job requirements. A typical SWR for electrical work contains only a few of the applicable requirements of PRD-1, other than by a general reference to the document. Instead, the SWR planner depends on the skill of the craft workers and worker safety training to ensure that the electrical safety requirements of PRD-1 are incorporated into field work practices. Clear guidance on the level of management review and approval commensurate with risk is not provided.

The work control system described by these documents includes few specific, *detailed requirements for the SWR.*

SWRs are prepared by a planner, and reviewed and approved by engineers, facility managers, other planners, and safety personnel using a computer-based process. INEL procedures indicate that the planner should visit the work site "as needed" to assure that the planned work can be done. Individuals reviewing and approving work orders can do so electronically, with no specific requirement to actually visit the work site or be knowledgeable of the work to be done. Also, only general criteria for determining electrical safety of work such as the job on which the CFA electrician was injured could be found. Crafts personnel are consulted on an as-needed basis for a check on the practicality of completing the work orders. PRD-1 establishes the responsibility for electrical safety reviews, but specifies only that these reviews are assigned to a designated safety professional. Neither SP 10.3.1.32 nor PRD-1 establish qualifications for safety personnel designated or authorized to approve work orders containing electrical safety issues. Also, there is no list of those so designated or authorized. LITCO safety and health program managers say that the approximately seventy safety and health staff are assigned to the various sites based upon qualifications and experience, and all can review and approve work orders containing electrical requirements. Safety and health staff are expected to solicit the assistance of specialists as necessary.

The SWR planning and review process does not provide assurance of a work plan that effectively addresses safety issues.

Significant differences in expectations regarding the use of zero energy checks as a safety barrier were encountered in interviews. PRD-1 and other procedures require the performance of zero energy checks as a matter of routine whenever a drawer is entered, a cover is removed, and when craft personnel perform work down stream of where they previously performed electrical work. Interviews with managers revealed that this requirement was also management's expectation, and, in some cases, it was believed that zero energy checks were made after craft personnel return to work after a lunch break. Interviews with craft personnel, however, suggested that zero energy checks are sometimes performed once, and that this is done at the point-of-entry and not repeated for down stream components.

Management expectations concerning the performance of zero energy checks were not reflected in worker interviews.

2.2.2 Work Planning and Controls

SWR AM279 established a baseline for work control. The SWR was reviewed and approved, as required, by a safety professional, the Systems Engineer, the contractor Facility Manager, and a planner. The Board conducted a review of the hazards identification and barrier planning supporting the SWR to determine the effectiveness of the preparation and approval process. Planning was effective in some areas. For example, the need for lockout/tagout was identified to establish baseline barriers, and SWR AM279 included work sequencing that established an administrative barrier, that is lockout/tagout of sources was to be followed by zero energy checks of multiple energy sources before doing work in each enclosure. However, some other areas were less effectively addressed; for example:

Hazards evaluation and barrier design was only partially effective in the case of SWR AM279.

- There were no fixed safety or sequence hold points established to stop the job for further assessment if deviations were encountered;

- The SWR did not require grounding of high voltage conductors isolated in the lockout/tagout;

. • The SWR did not incorporate the requirements of the safety placard (operator aid) posted on the M-7 drawer front that instructed isolation of specific 2400 VAC breakers prior to work in the potential transformer drawer;

- The SWR did not include pertinent information such as components that would remain energized, the location of items to be removed, and the anticipated route of access to those items; and,

- A number of persons interviewed by the Board said that the SWR work sequencing was very complex and difficult to follow.

Further, in the case of SWR AM279, the hazards identification and barrier planning were based on drawings and vendor data reviews, unsupported by a comprehensive field walk-down of the system. Consequently, the workers encountered unanticipated conditions. In particular, the M-7 potential transformer tilt-out drawer was unlike M-6 and the M-8 potential transformer pull-out drawers for which the SWR procedures had been developed. An attempt to complete the work on M-7 caused the removal of a critical physical barrier not identified as such in the SWR.

The formal pre-job briefing required by LITCO was not performed, thereby eliminating one opportunity for informing the CFA electrician of job hazards.

To compound these shortcomings in SWR AM279, a number of implementation shortcomings occurred. INEL procedures require a formal pre-job briefing covering a check list of safety items. This briefing is intended to provide job-specific information and knowledge, as well as a broad understanding of the scope and hazards of the planned work. In the case of SWR AM279, the pre-job briefing presented on August 1 only included work steps to be done before the planned outage. No formal briefing covering all required aspects of the pre-job briefing was conducted for the remainder of the job steps. Less formal, follow-on briefings provided by the Leadman as workers came on the job for the first time addressed the work scope and types of activities to be accomplished. These less formal briefings also did not fully cover the SWR pre-job briefing check list items for work steps scheduled during the planned outage. In fact, interviews determined that the Leadman himself had not been formally briefed on these job steps.

There was no work halt when the differences between the M-7 drawer configuration and the plan were observed.

Field implementation of an SWR begins with acceptance by the Foreman or Leadman, including verification of the planned safety measures. The Leadman accepted SWR AM279, even though the actual equipment configuration was not included in the SWR. In this case, significant differences between the SWR planning basis and the actual equipment configuration emerged when the potential transformer drawers were opened. Despite these differences, no work hold was implemented to resolve potential safety issues. In addition, the instructions on the safety placard on the M-7 drawer were not followed nor did the CFA electrician understand that certain components would remain energized as a result. Subsequently, the CFA electrician did not perform zero energy checks in the M-7 enclosure because he assumed that components in the M-7 enclosure were de-energized based on a zero energy check done in the M-8 enclosure.

These electricians did not follow the required sequencing of SWR AM279 and did not have prior written approval for alternate sequencing. In addition, examination of the accident scene revealed that the electricians did not sign and date work steps they completed.

2.2.3 Supervision, Management and Oversight

Since the CFA electrician was loaned to TRA, he was working under the supervision of the Leadman.

Management of the work on SWR AM279 was under the control of the Director, TRA Reactor Programs. Through this organization, the responsibility flowed through the Maintenance Manager, Instruments/Electrical Crafts Supervisor, Foreman, job Leadman, and finally to the CFA electrician. Others having responsibilities related to this work were the ATR Operations Manager, Utility Area Supervisor, Utility Area Controller, Systems Engineer, planner, and safety reviewer. It is generally agreed by individuals interviewed that the Foreman or Leadman has the primary supervisory responsibility for jobs such as this. The responsible supervisor can be either a LITCO Foreman or a Leadman from one of the crafts. The January 1, 1996, collective bargaining agreement between the Oil, Chemical and Atomic Workers International Union, Local 2-652 and LITCO permits the use of its members to fill the role of job Leadman or supervisor. In this case, the presence of the CFA electrician brought another requirement into play. As specified in SD 12.0.2, *Training Requirements*, it is the responsibility of craft foremen/supervisors to ensure that new or loaned employees to TRA work with a qualified craftsman or under direct supervision. This requirement does not define what is intended by direct supervision. Interviews conducted by the Board revealed some degree of confusion concerning the proper implementation of this requirement. During the work on August 12 and 13, the Leadman had primary responsibility for supervision of the CFA electrician. The Foreman provided periodic monitoring of work activities. No additional monitoring of work activities was identified.

ID and LITCO conduct performance monitoring at INEL.

Both ID and LITCO conduct performance monitoring at INEL. The LITCO Quality Assurance and Oversight Organization is responsible for independent internal oversight and employs a subcontractor, Coleman Research Corporation, to perform assessments. ID monitors the performance of LITCO using matrixed staff, and conducts its activities independently from LITCO oversight activities. Site-wide oversight specific to electrical safety could not be identified on the part of either ID or LITCO.

LITCO Reactor Programs also conducts self assessments.

Self assessments are conducted on a periodic basis by LITCO Reactor Programs. These self assessments which include TRA, focus on the review of the physical plant to identify deficiencies in

housekeeping, building conditions, hazardous materials, electrical systems, fire protection, general safety, and winterization. Self assessments do not include an evaluation of work controls or management processes as they pertain to electrical safety.

LITCO trends "problem areas" that are identified based upon risk, number of reports, and root cause.

Other pertinent management systems reviewed by the Board include the LITCO Occurrence Reporting and Lessons Learned Programs. The LITCO Occurrence Reporting Program Coordinator has been producing trending reports for approximately one year on an intermittent basis. The trending reports focus on "problem areas" based upon risk, number of reports and root cause. The reports are distributed to about 100 mid-level managers (mostly contractor Facility Managers) with a limited number of higher level managers receiving the reports. Two briefings on site-wide trends have been presented to LITCO senior management, one in March 1996 and one shortly after this accident.

LITCO has established an active Lessons Learned Program.

LITCO's Lessons Learned program distributes lessons learned from a variety of sources to approximately 400 employees at all levels of management. Additional distribution is sometimes made by the initial recipient. The program targets information to specific individuals based upon their job classification, job title and desire to receive specific categories of information. Each lesson learned includes a request that, if actions are taken because of the lesson learned, the Program Coordinator be provided the name of the responsible manager to enhance coordination. The Lessons Learned Program has been in formal existence for approximately one year.

Internal and external reviews have identified work control weaknesses.

There have been several documented assessments and evaluations performed by ID, LITCO, and DOE Headquarters that have identified work control, lockout/tagout, configuration control, and electrical safety as areas of concern that were directly applicable to the TRA. Specific examples include the following:

A March, 1995 ID review identified concerns regarding the rigor applied to work package preparation and execution, as well as the corrective action closure process.

In March 1995, the ID Office of Policy, Assurance, and Resource Management Assurance Division did a review, *Functional Appraisal Final Report - Work Control Processes*, Report #ADR-95-017. The primary objective was to determine if the work control programs were still working as before the LITCO contract, and whether the LITCO transition had introduced any vulnerabilities or improvements. The appraisal team found no new vulnerabilities associated with the LITCO transition, some improvements, and that the existing work control systems were still those of previous contractors. One specific concern within the report indicated the rigor applied to work package preparation, execution, and closure process at TRA is not at a level

that ensures the satisfactory completion of all work before returning equipment to service (ADR-95017-NS-001-CRN).

In May 1995, a LITCO independent performance assessment was conducted (Report Number 95-MS-15, RJLM-020-95) in the area of work control. A finding was identified which concluded, "There are no guidelines describing the required safety information that must be incorporated into a work control document. Inattention to detail is pervasive throughout the work control process at INEL facilities and control of systems modification is inadequate." The associated June 20, 1995, corrective action plan contained milestones including: 1) incorporate safety requirements into work control documents; 2) develop a standard procedure for work planning packages; 3) share Facilities/Utilities/Maintenance (FUM) lessons learned and safety programs, and training qualification programs with other maintenance organizations; 4) provide FUM supervisors and foreman work control and work performance training; 5) develop a consistent lockout/tagout procedure/permit and a standard outage procedure/permit; 6) re-evaluate FUM work practices and procedures; and 7) address facility-specific configuration control issues and develop an overall work control procedure to incorporate necessary controls/approvals required to change the configuration of systems, equipment, or components. All these corrective actions were scheduled to be completed on or before October 1, 1995, but the corrective actions on some issues remain incomplete.

A May 1995 LITCO assessment identified a lack of guidance concerning safety information and noted a pervasive inattention to detail throughout the work control process.

In October 1995, the DOE Headquarters Office of Oversight performed a safety management evaluation at INEL. An overall rating of "Acceptable Overall Performance" was awarded. However, Guiding Principle 2 was rated "Improvement Needed" based on concerns regarding identification of potential hazards, the analysis, control, and resolution of potentially hazardous conditions, DOE and contractor performance assessment programs, and site configuration control. No specific corrective actions were identified by ID or LITCO and the report was distributed for information only.

In October 1995, a safety management review identified concerns related to hazards identification and mitigation, performance assessment programs, and configuration control.

From December 1995 through August 1996, the following ten electrical incidents occurred at the INEL. Common deficiencies include lockout/tagout, work control, and configuration control - deficiencies previously identified in the reviews discussed above.

In the period following these reports, ten electrical safety incidents have occurred including four at TRA.

- December 12, 1995 at TRA - System unexpectedly energized (no injury)

- December 31, 1995 at Idaho Chemical Processing Plant (ICPP) - Conduits penetrated during core drilling (no

injury)

- May 9, 1996 at TRA - Electrical hazard identified (no injury)
- June 17, 1996 at TRA - Lockout/tagout violation (no injury)
- June 25, 1996 at TRA - Work performed without appropriate approval (no injury)
- July 11, 1996 at ICPP - Work without lockout/tagout (near-miss)
- July 15, 1996 at ICPP - System energized after zero energy verification (near-miss)
- July 24, 1996 at ICPP - Disconnected wires from wrong terminal board (no injury)
- July 25, 1996 at Idaho Falls Facility (IFC) - Violation of Safe Work Permit (near-miss)
- August 13, 1996 at TRA - Electric Shock (one injury)

In April 1996, a Department-wide advisory was received noting the high incidence of electrical safety issues.

On April 16, 1996, the ID Operations Office Manager received a memorandum from the Deputy Assistant Secretary for Oversight highlighting electrical shock events as a significant issue complex-wide. The memorandum recommended the Operation's Manager review all planned and ongoing electrical work to ensure electrical safety is properly implemented at the working level. This memorandum was further disseminated within the ID Office for information only.

In June 1996, a composite team noted that the LITCO procedure on work control remained unpublished.

On June 13, 1996, an Independent Safety Review Team issued a report, (Focus Area 3 Site Assessments - JHC-46-96) stating that a review of work control procedures was completed and PRD-25, *Safety Review*, was not implemented in all areas. Furthermore, it was determined that the requirements within PRD-25 were unclear. PRD-25 was modified in July 1996 to improve clarity. However, the work control requirements were removed, with the intention of incorporating them into a new document, PRD-108, *Work Control*. At the time of this investigation, PRD-108 remained in draft, although interviews with LITCO management personnel say that they anticipate issuance of PRD-108 in October 1996. However, at present there is no site-wide procedure on work control, and many other corrective action milestones have not been accomplished.

2.2.4 Training and Qualification

LITCO maintains a centralized training organization.

The DOE programmatic training requirement invoked at the TRA is DOE 5480.20A, *Personnel Selection, Qualification, and Training Requirements for DOE Nuclear Facilities*. LITCO has developed a systematic training approach to implement DOE 5480.20A requirements as documented in the *Advanced Test Reactor Training Implementation Matrix* (Issue #005, dated September 18, 1995). LITCO operates a centralized training organization (INEL Institute) supplemented by site-specific training organizations to implement the training program. Individual training records are maintained on automated data bases to provide for timely accessability.

PRD-1 established site-wide electrical safety training requirements, but INEL training does not address all OSHA qualifications.

Site-wide electrical safety training requirements are contained within PRD-1. These requirements are based on the Occupational Safety and Health Administration (OSHA) standards in 29 CFR 1910, Subpart S, Electrical Safety, dated October 30, 1995. In addition to the technical requirements, there are four categories of electrical safety requirements delineated within PRD-1 that are, in ascending order, General Employee, Higher-Than-Normal Risk Employees, Qualified Electrical Workers, and High Voltage Workers. INEL classroom safety training includes the electrical safety requirements of PRD-1. A written test is required for completion of safety training, but no practical demonstration of safety knowledge and skills is required for course completion.

The *ATR Training Program Manual* requires, as a minimum, all electricians doing work within the TRA to be First Class Electricians with three years experience. An electrician must complete a four-year program or have documented work experience and training equivalency to attain First Class Electrician status. Both electricians associated with the electrical accident on August 13, 1996, were trained to the High Voltage Worker requirements and met the TRA Training Program Manual requirements.

There are no formal qualifications for the position of Leadman.

However, it is important to note that there are no formal qualification requirements established for the Leadman position. Rather, Leadman status is assigned to an individual based upon the Foreman's observation of the individual's performance.

To perform the work under SWR AM279, a loaned electrician from CFA was assisting TRA electricians. While he had the same training and credential as the TRA Leadman (High Voltage Training and First Class Electrician), the CFA electrician was not familiar with the equipment to be worked on and received only a general briefing on the scope of the work to be done. Moreover, while the CFA electrician

had the required safety training to do high voltage work, he had minimal technical experience in the type of work to be performed at TRA, since at CFA linemen-qualified electricians do most of the high voltage work.

2.3 BARRIER ANALYSIS

The safety barriers between the CFA electrician and the high voltage hazard within the M-7 enclosure included physical barriers, management barriers, and administrative barriers. The barriers are presented in summary form in Figure 2.5 and are discussed in more detail below.

2.3.1 Physical Barriers

The only physical barrier between the CFA electrician and the energy source in the M-7 enclosure was the top cover. This cover was removed intentionally by the CFA electrician to allow access to the wires that were to be clipped. Removal of this cover exposed the bus-side stabs that were connected by cable to the energized 2400 VAC bus.

The only physical barrier was intentionally removed.

2.3.2 Management Barriers

Hazards Evaluation

A hazards evaluation is the basis from which an effective barrier design is constructed. Barriers are only designed for those hazards that are identified. In this case the hazards evaluation was not sufficiently comprehensive. For a number of reasons, possibly including local interpretations of the definition of working "near" high voltage, a lack of a complete and accurate set of as-built drawings and vendor data, and a work site walk-down that was not sufficient to detect the configuration differences of interior components, the energized 2400 VAC components inside the M-7 potential transformer enclosure were not identified as a potential hazard. Since this hazard was not identified, the overall barrier design was significantly weakened.

The hazards evaluation was incomplete.

Management Ownership

At each appropriate level within every organizational unit, line management must assume ownership and clearly communicate responsibility for the protection of workers, the public, and the environment. The LITCO *Safety and Health Policy* and PDD-16, *Overview of LITCO Safety and Health Program*, indicate that line managers are responsible for safety and health. However, specificity regarding the expectations for involvement in specific tasks, such as ensuring the quality of SWR's through management review, is lacking. The facts surrounding this accident include a number of examples of poor implementation of procedures, beginning with the preparation of the SWR and continuing through the failure of the workers involved to sign off the work steps completed. Line management ownership of safety and health must include a responsibility to ensure that required safety processes are being routinely practiced by workers. In most cases, this is accomplished by a functional performance monitoring program accompanied by management walk-downs of work areas under their purview. In this case, there has not been effective line management follow-up on their

LITCO line management has not established firm ownership of work planning and execution.

commitment to effective hazard evaluation, establishment of effective work controls, and ensuring the implementation of those work controls.

Additionally, the SWR is approved by four persons. There is no single, final approving authority who accepts the residual risks in the work package on the part of LITCO and the ID Manager. Lacking this single approval authority, there is no management ownership of the SWR.

The LITCO SWR approval process does not require graded management risk acceptance.

In this case, the elevated risk of performing electrical work near energized high voltage components was accepted without seeking the approval of any manager above that required for an operation involving a routine risk level. There is no local procedure, policy, or guidance that identifies situations that might represent unusually high risk, nor is there any administrative procedure requiring additional management reviews of the mitigating safety measures proposed to address the risks being accepted. Therefore, there is no assumption of ownership or risk by more senior management.

Work Control Safety Requirements

Work safety requirements were not effectively executed for SWR AM279.

Safety requirements were intended to provide a barrier between the CFA electrician and the energized components. First, it is a necessary to conduct a hazards analysis as an integral part of SWR preparation. As discussed, the hazards analysis was not comprehensive, and, in fact, did not address the 2400 VAC hazard in the M-7 potential transformer enclosure. This was caused by the lack of information available to the planner and a less-than-comprehensive walk-down of the work site during planning. Since the 2400 VAC hazard was not addressed, the enclosure cover was not identified as a barrier, and no administrative measures were put in place to ensure that the cover remained in place.

Secondly, the SWR required a formal pre-job briefing to the all the craft personnel by supervisory personnel to formally convey the hazards and work requirements of this job. This briefing was intended to provide the knowledge and understanding of the safety issues required to allow electricians to make good work decisions based on the “skill of the craft.” In this case, the required pre-job briefing check list was not covered per the work package instructions.

Third, the SWR included a required job sequencing as an administrative barrier to mitigate certain recognized hazards. Some work steps in SWR AM279 were performed out of sequence, and work steps were not signed and dated as they were accomplished to

assure that sequencing was maintained. This failure to follow work sequence indicated a lax attitude toward work controls.

Additionally, some requirements are not specific enough to assure sound safety planning and effective mitigation of hazards by barriers. For example, specifications and guidance for hazards identification and barrier design contained in PRD-1, PRD-25, and other supporting procedures are very general. Similarly, there is no firm requirement for planners to do a thorough walk-down of a prospective work site when suspect as-built drawings and vendor data are encountered. There is also no requirement for planners to insert safety hold points and caution statements where uncertainties exist. Further, there are no specific qualifications for safety personnel reviewing SWRs. The lack of specific review criteria for SWRs and the absence of qualification criteria for review personnel creates the potential for inadequate safety review.

In summary, work control safety requirements were only partially effective as a barrier, since many were not implemented effectively and management did not take action to assure that they would be.

Performance Monitoring and Oversight

Performance monitoring and oversight identified weaknesses, but the corrective actions were not timely.

Self assessments, internal oversight, and external oversight have identified a number of shortcomings over the past 18 months that are related to the weaknesses in procedures, implementation of work controls, lockout/tagout, and configuration control. The benefit of identifying these shortcomings was only partially realized because of a failure to meet identified corrective action milestones on a number of occasions, especially in the publication of improved work control procedures. LITCO did not implement these corrective actions in a timely manner and ID did not insist that the milestones be met. This weakness in the corrective action process resulted in a lost opportunity to implement an enhanced work control structure that would apply a more effective management barrier to accidents.

Specific SWR AM279 weaknesses were not identified prior to the accident.

In addition, there is no evidence that ID or LITCO management was aware of the specific shortcomings of SWR AM279, the lack of pre-job briefings, the deviations from planned work sequencing, or that completed work steps were not being signed and dated. Weaknesses in monitoring the performance of work in progress weakened the effectiveness of the work controls that were in place.

Direct Supervision

The TRA requirement that crafts personnel from outside the TRA Maintenance Organization must work with a qualified TRA craftsman or under direct supervision was intended to ensure that the possible lack of area-specific information on the part of an outside craftsman would be mitigated by the knowledge of a TRA craftsman. This requirement places supervisory responsibility on Leadmen, who are selected primarily on the basis of their technical competence. The only written description of the authority delegated to a Leadman or the supervisory activities expected of a Leadman is in the collective bargaining agreement. This description is not specific or detailed enough to fully inform the Leadman. Interviews indicated that the Foreman expected more supervisory activities from the Leadman than the Leadman believed was appropriate or the collective bargaining agreement called for. In this case, the supervisory challenge presented to the Leadman was further complicated by an inadequate SWR and unanticipated differences among the switchgear components.

The supervision requirements placed on the Leadman were not specific or detailed.

The Leadman knew that the 2400 VAC bus and the connected stabs were energized and he was again reminded of that fact by the Utility Area Controller. However, in the confusion surrounding the switch of work effort to the M-7 enclosure and the perceived schedule compression, the Leadman allowed the CFA electrician to work out of sight in an area that contained the only physical barrier to the high voltage, thereby only partially implementing the barrier of direct supervision.

The Leadman allowed the CFA electrician to work out of direct line of sight.

2.3.3 Administrative Barriers

Skill of the Craft

The SWR planning system anticipates a base level of skill on the part of craft personnel. This base level of skill, referred to as "skill of the craft," is assumed to make an exhaustive reiteration of all applicable safety measures and steps in the SWR unnecessary. However, there is no common understanding at INEL as to the specific knowledge and skills represented by "skill of the craft." There is little evidence that the planners are familiar with the job task analyses and lesson plans that form the basis of the safety training program, nor that the trainers are familiar with the assumptions made by the planners. Further, there is no commonly-acknowledged delineation between knowledge regarded as "skill of the craft" and that which should be regarded as job- or site-specific.

LITCO places too much reliance on "skill of the craft" to ensure that safe work practices are followed.

PRD-1 defines a qualified person as one who is familiar with the construction and operation of equipment and the hazards involved. However, in addition to the electrical safety training specified in PRD-1, technical information concerning configuration and hazards of specific equipment is required to meet the PRD-1 and OSHA standard for qualification. Training and experience required by LITCO to attain First Class Electrician and completion of the additional high voltage working training requirements in PRD-1 do not, in themselves, assure that an electrician is "qualified," in the PRD-1 and OSHA sense, to perform a particular task.

This latter consideration is of particular concern when crafts personnel are on loan from other INEL organizations, or are working on unfamiliar equipment. The "skill of the craft" possessed by the CFA electrician was not, in itself, sufficient to overcome the shortcomings of SWR AM279, thereby removing this as an effective barrier.

Pre-job Briefing

The pre-job briefing required by SWR AM279 was a partial barrier, since it would have presented information that could have assisted the CFA electrician in understanding potential hazards. Since the work steps in which he participated were not fully or formally briefed, this designed barrier was not implemented.

There was no pre-job briefing for the CFA electrician.

Lockout/Tagout

Lockout/tagout of key points in the energy distribution system is one of the most effective barriers to electrical hazards. In this case, while lockout/tagout was effectively implemented on all identified circuit components, the planned work included some circuit components remaining energized in a nearby compartment. Therefore, these components were intentionally not included in the lockout/tagout procedures. As a result, lockout/tagout was not included as a planned barrier to the energized components.

Lockout/tagout, normally used as a barrier, was not used in this case.

Ongoing Communication

The exchange of safety-related information among workers can often be an effective barrier. In this case, there appeared to be little sharing of information. The Leadman did not directly communicate the presence of energized components in the M-7 enclosure to the CFA electrician, nor did they discuss the possible hazards arising from the discovery that the M-7 drawer was different from the other two. The CFA electrician depended on a zero energy check that he had not observed and did not ask the Leadman if the previous lockout/tagout

There was a lack of effective communication regarding job hazards.

and zero energy check assured zero energy on the components in the M-7 drawer. Since ongoing communication was not maintained during work performance, this barrier was not implemented.

Safety Placard

The requirements of the safety placard on the M-7 drawer were not addressed in the SWR. The requirements were bypassed without note or further approval by the Leadman when the drawer was tilted out, even though the intent was to leave the 2400 VAC bus in the M-7 enclosure energized. Explicit authorization should have been required to override this safety warning since the safety placard was not addressed in the SWR. Also, if the CFA electrician had noticed and read the placard, it could have served to inform him of the potential for remaining energized components in that enclosure, perhaps causing him to exercise more caution or to seek additional guidance. Since there was no review of the decision to override this safety warning and since the CFA electrician did not read the placard, this barrier was not implemented.

The information on the safety placard was not noticed or was ignored.

Zero Energy Checks

There were no zero energy checks made in the M-7 enclosure. The lockout/tagout provisions of the SWR did not indicate specific requirements for the M-7 enclosure and the Leadman knew that there were energized components in the enclosure. The CFA electrician assumed that the earlier zero energy checks made in the M-8 enclosure also assured zero energy in the M-7 enclosure and that no further checks were needed. Procedures and stated management expectations seem to require zero energy checks upon the opening of an enclosure and before beginning work on any component. However, the PRD-1 as written could imply that previous zero energy checks were sufficient, and interviews indicated that at least some crafts personnel interpret the requirements in that manner. A routine check made upon opening the top cover of the M-7 enclosure would have been an effective barrier, but, since none was made, this barrier was not implemented.

There was no zero energy check made in the M-7 enclosures, because the CFA electrician believed that earlier checks were sufficient.

2.4 CHANGE ANALYSIS

A change analysis was conducted to determine changes or differences that may have had an effect on the accident. Based on these differences, an analysis was made to determine if the change or difference may have been a cause of the accident. The results of this analysis are in Table 2.1

TABLE 2.1 Change Analysis

Change or Modification		Analysis	
Planned/ Normal	**Actual**	**Difference**	**Analysis**
The SWR identifies hazards and includes barriers designed to mitigate all identified hazards.	The SWR did not identify the energized 2400 VAC component in the M-7 potential transformer enclosure and did not identify that the enclosure cover was a barrier.	CFA electrician was not made aware of the presence of the hazard nor the use of the enclosure cover as a barrier.	CFA electrician did not expect an energized component to be present inside the M-7 potential transformer enclosure.
All potential transformer drawers were expected to be the same, with access to the work area to be made through the drawer.	The M-7 potential transformer drawer was not like the M-6 and M-8 drawers.	The configuration of the M-7 drawer, even when tilted out, did not allow access through the drawer to the components to be modified.	The configuration differences were noted yet work did not stop. An attempt to carry out the intent of the work activity in the face of configuration differences led to the removal of the enclosure cover plate and exposure to unexpected hazards.
Zero energy checks are performed on electrical parts in each compartment prior to commencing work.	No zero energy checks were performed in the M-7 potential transformer enclosure.	The CFA electrician was exposed to undetected high voltage hazards.	The CFA electrician did not recognize that lockout/tagout procedures in the SWR and previous zero energy checks were not adequate to provide protection when working in the M-7 potential transformer enclosure.
The SWR specifies all necessary work steps.	The SWR work steps did not reflect the differences in the potential transformer drawers.	Similar work was required in each cabinet, but different approaches were required when working in M-7.	The CFA electrician did not recognize that the approach used in the M-8 enclosure would be unsafe in the M-7 enclosure.
All work steps are performed in specified sequence and signed off as completed.	The work steps not signed off as completed.	Steps may have been completed out of sequence.	This is an indicator of poor work practices.
As-built drawings and vendor data provide complete and accurate information.	The differences between the M-7 drawer and the other two was not included in vendor data.	The SWR did not reflect actual work site conditions.	Due to the significant configuration differences, the workers performed tasks using their own judgement without the benefit of a hazards review.

Change or Modification		Analysis	
Planned/ Normal	**Actual**	**Difference**	**Analysis**
The pre-job briefing would include all necessary information for each work step to be completed, including anticipated hazards.	Three partial pre-job briefings were held. The combination of these briefings did not include all work steps and their associated hazards.	No formal pre-job briefings were held on the tasks being performed by the CFA electrician, including the associated hazards..	The lack of detailed pre-job briefings led to insufficient system and task knowledge for the personnel involved. The lack of knowledge and understanding of hazards and work requirements did not allow good decision making based on "skill of the craft."
Work would be performed by an experienced TRA electrician.	Some elements of the work were performed by a TRA-supervised CFA electrician.	The CFA electrician did not have the same level of area and job-specific knowledge.	The CFA electrician was not familiar with the split-bus configuration in the switchgear. Communication between the CFA electrician and the Leadman was not sufficient to identify the planned presence of energized components in the M-7 potential transformer enclosure. While the CFA electrician was trained in high voltage work, he had minimal experience in work such as this.
The Leadman would be cognizant of the CFA electrician's actions at all times.	The Leadman was not aware of the CFA electrician's actions when he opened the enclosure cover and reached inside.	The CFA electrician was not prevented from removing the cover of the M-7 potential transformer enclosure or working inside the M-7 potential transformer enclosure.	The Leadman did not observe the CFA electrician remove the top cover. He also did not observe that the CFA electrician was working in the close proximity of components the Leadman knew were energized.

2.5 CAUSAL FACTORS

The **direct cause** of the accident was the lack of effective work control. However, there were also root causes and contributing causes. Root causes are the fundamental causes that, if corrected, would prevent recurrence of this and similar accidents. Contributing causes are other causes that, would not, by themselves, have prevented the accident but are important enough to be recognized as needing corrective action. An Events and Causal Factors Chart used to analyze the causal factors is presented as Figure 2.6. A tabular summary of the analysis is in Table 2.2.

Root causes of the accident were:

- Management did not ensure that an effective management control system was in place to develop and implement adequate work controls.

- A lack of clarity and training concerning the supervisory responsibilities of the Leadman led to inadequate supervision of the CFA electrician.

- The CFA electrician did not understand that there were energized components in the enclosure.

Contributing causes of the accident were:

- LITCO did not mitigate legacy configuration control weaknesses with good work planning.

- Some LITCO managers do not have a clear understanding of their roles, responsibilities, and authorities in electrical safety.

- ID and LITCO have not taken the steps necessary to complete corrective actions in a timely manner and confirm that corrective actions were effective.

- There is no clear delineation of the "skill of the craft" used as a substitute for explicit safety requirements in SWRs.

TABLE 2.2 Causal Factors Analysis

Root Causes	Discussion
Management did not ensure that an effective management control system was in place to develop and implement adequate work controls.	Management failed to put in place a comprehensive and sufficiently detailed work control system that would adequately address hazards identification, SWR preparation and review, qualifications for SWR safety review and approval, integration of work planning with training programs, and other elements of a comprehensive work control system. In addition, management did not assure that the requirements of the present work control system were effectively implemented.
A lack of clarity and training concerning the supervisory responsibilities of the Leadman led to inadequate supervision of the CFA electrician.	The Leadman was aware of the presence of energized electrical components in the area where the CFA electrician was working. If the Leadman had maintained adequate awareness of the actions of the CFA electrician, he could have prevented him from working in the hazardous area without adequate barriers.

Root Causes	Discussion
The CFA electrician did not understand that there were energized components in the M-7 potential transformer enclosure.	If the CFA electrician had recognized the presence of energized components in the M-7 potential transformer enclosure, he would not have placed himself in a position to be injured. The Leadman and others did not take positive steps to ensure that the CFA electrician understood all job hazards, the CFA electrician did not recognize the danger indications of warning placards, he stated that he did not recognize key high voltage electrical parts (the drawer "stabs"), and he did not conduct zero energy checks as intended by PRD-1.
Contributing Causes	**Discussion**
LITCO did not mitigate legacy configuration control weaknesses with good work planning.	There are acknowledged, Department-wide shortfalls in configuration management of legacy equipment. Sites must mitigate this weakness by appropriate work planning. SWR AM279 planning did not include an appropriate job site walk-down and the SWR did not include appropriate work sequencing, including confirmatory work halts, or detailed hazard identification to mitigate the actual configuration differences found.
Some LITCO managers do not have a clear understanding of their roles, responsibilities, and authorities in electrical safety.	A lack of clarity regarding roles and responsibilities for hazards analysis, risk-based approval authority, control of craftsmen, hazards communication, and briefing of work packages weakened key safety systems. The reduced effectiveness of these controls contributed to this accident.
ID and LITCO have not taken the steps necessary to complete corrective actions in a timely manner and confirm that corrective actions were effective.	While previously identified shortcomings in safety management did not specifically address all the causal elements of this accident, a number of the corrective actions intended to correct these shortcomings, if addressed effectively, could have increased the likelihood of preventing this accident.
There is no clear delineation of the "skill of the craft" used as a substitute for explicit safety requirements in SWRs.	If assumed "skill of the craft" is to be used to allow planners to eliminate exhaustive listing of safety requirements, the skills and knowledge included under "skill of the craft" should be identified and made available in common form to trainers, work planners, supervisors, and workers. If this is not done, then there cannot be any reliance on a "commonly understood" baseline for safety knowledge and skills upon which to base plans and work expectations.

3.0 CONCLUSIONS AND JUDGEMENTS OF NEED

This section of the report identifies the conclusions and judgements of need determined by the Board as a result of using the accident analysis methods of Section 2.0. Conclusions of the Board are those considered significant and are based upon facts and pertinent analytical results. Judgments of need are managerial controls and safety measures believed by the Board to be necessary to prevent, reduce the probability, or mitigate the severity of a recurrence of this type of accident. They flow from the causal factors and are directed at guiding managers in developing follow-up actions. Table 3-1 lists the conclusions and the corresponding judgments of need identified by the Board.

TABLE 3.1 Conclusions and Judgments of Need

Conclusions	Judgements of Need
High risk activities require that all exposed personnel have full knowledge of hazards to be encountered. Actions preceding this accident did not assure that all personnel were adequately informed.	LITCO needs to provide increased assurance that exposed personnel are informed of hazards.
LITCO does not have a comprehensive program in place to ensure electrical workers are "qualified" prior to commencing field work.	LITCO needs to assure that those involved in work package planning, approval, and execution know and understand "qualified" as described in PRD-1 and 29 CFR 1910.
LITCO zero energy verification practices are inadequate to ensure protection from hazardous electrical energy. Management expectations concerning when zero energy verifications are performed are not always understood or implemented by craft workers.	LITCO needs to clarify site expectations for zero energy verifications. The formal requirements need to be more specific and emphasis needs to be placed on communicating these requirements to workers.
"Skill of the craft" is undefined and management/planner expectations are different from those of craft personnel. Further, some have extended "skill of the craft" to include site-specific procedures and systems knowledge that cannot be reasonably expected in loaned craftsmen.	LITCO needs to clearly define expectations with regard to "skill of the craft" in both work control procedures and craft training. LITCO also needs to clearly identify site and job-related skills and knowledge that may be beyond "skill of the craft" expectations as an integral part of work planning.
As part of a DOE-wide legacy issue, as-built drawings and vendor data for older equipment at INEL cannot be accepted as current, especially for non-nuclear/industrial facilities.	LITCO needs to assure that risk-based compensatory requirements are defined and implemented to compensate for this vulnerability.

Conclusions	Judgements of Need
Roles and responsibilities are not clearly defined for work control. As a result, this work was inadequately planned and was not executed according to the plan. Further, the lack of a single approving authority for the SWR decreases management ownership and the resulting management oversight.	LITCO needs to revise and amend their program control documentation to more clearly delineate the roles, responsibilities, and authorities of each manager, supervisor, and worker, and communicate them. LITCO needs to revise review and approval procedures to assure that one manager assumes primary ownership of each work package. LITCO needs to assure that the level of management review and approval is commensurate with the risk accepted.
Management performance monitoring and oversight systems at LITCO, ID, and DOE Headquarters have identified significant deficiencies in management control systems. However, the external reports were distributed by ID as "Information Only" without specific action required.	LITCO needs to increase management attention and emphasis on correcting identified deficiencies. ID needs to ensure that effective actions are identified, achievable milestones are agreed upon, that LITCO completes milestones within the agreed schedule, and that completion of agreed actions is verified.
Delay in publishing PRD-108, *Work Control* and inadequate specificity in PRD-25, *Hazard Evaluations*, and other lower tier procedures contributed to the inadequate work control responsible for this accident.	LITCO needs to place increased emphasis on compiling guidance for work controls, hazard evaluations, and work packages to ensure that appropriate safety requirements are integrated into work control documents and implemented in the field.

4.0 BOARD SIGNATURES

_____ Date_____

John Martin
DOE Accident Investigation Board Chairperson
U.S. Department of Energy
Idaho Operations Office

_____ Date_____

Bob Secondo
Board Member
DOE Accident Investigator
U.S. Department of Energy
Idaho Operations Office

_____ Date_____

Michael R. Anderson, P.E.
Board Member
DOE Accident Investigator
U.S. Department of Energy
Idaho Operations Office

_____ Date_____

Lawrence E. Miller
Board Member
U.S. Department of Energy
Office of Nuclear Energy, Science and Technology

_____ Date_____

Rolland Sigler
Board Member
DOE Accident Investigator
U.S. Department of Energy
Office of Environment, Safety and Health

_____ Date_____

John W. Teske, P.E., C.S.P., C.I.H.
Board Member
DOE Accident Investigator
U.S. Department of Energy
Office of Environment, Safety and Health

5.0 BOARD MEMBERS, ADVISORS AND STAFF

Chairperson	John R. Martin, DOE Idaho Operations Office
Member	Michael R. Anderson, DOE Idaho Operations Office
Member	Lawrence E. Miller, DOE NE-40
Member	Robert J. Secondo, DOE Idaho Operations Office
Member	Roland M. Sigler, DOE EH-24
Member	John W. Teske, DOE EH-24
Advisor	Dennis L. Vernon, DOE EH-21
Advisor	Scott B. Gilmore, AlliedSignal, Federal Manufacturing & Technologies
Medical Advisor	Joseph P. Falco, M.D., SUNY Health Science Center
Legal Advisor	Simon S. Martin, DOE, Idaho Operations Office
Union Advisor	Brian K. Morris, Oil, Chemical & Atomic Workers
Technical Writer	Richard L. Donovan, Eagle Research Group, Inc.
Analytical Support	William C. McQuiston, Idaho Operations Office Donald E. Shadley, DOE, Idaho Operations Office
Administrative Support	Kristen Hansen, Compton Services Sylvia Hansen, Compton Services

Appendix A

United States Government **Department of Energy**

memorandum

DATE: August 14, 1996

REPLY TO ATTN OF: EH-2: Office of Oversight: Podonsky: 3-3777

SUBJECT: Investigation of the August 13, 1996, Electrical Shock Accident at the Idaho National Engineering Laboratory, Idaho

TO: John M. Wilcynski, Manager
Idaho Operations Office

This is a follow-up to informal consultations we have had with Warren Bergholz and your staff regarding the convening of a Type A Accident Investigation Board as a result of the electric shock accident at the Idaho National Engineering Laboratory, Idaho, on August 13, 1996. Consistent with DOE Order 225.1, Accident Investigations, my office has been responsible for the conduct of Type A investigations since May 5, 1993. However, given the particular circumstances of this accident, I chose to defer paneling of this investigation to your office with the following provisions:

1. The accident investigation board chairperson is an Idaho Operations office employee that meets the criteria contained in DOE Order 225.1; and

2. The accident investigation board composition include a representative from Nuclear Energy, Larry Miller, and Environment, Safety and health reperesentatives, John Teske and Rolland Sigler.

Given my office responsibilities, we plan to have Dennis Vernon, DOE Accident Investigation Program Manager, of my staff serve as an Advisor to this Type A Accident Investigation Board.

My staff is available to assist you in learning the circumstances of this unfortunate event and gleaning appropriate lessons learned for the Department of Energy community at large. Please keep Glenn Podonsky, Deputy Assistant Secretary for the Office of Oversight, informed of the status and progress of this investigation.

I would expect the report for the Accident Investigation be forwarded to me no later than September 16, 1996.

Tara O'Toole, M.D., M.P.H.
Assistant Secretary
Environment, Safety and Health

cc:
G. Podonsky, EH-2

Appendix B

United States Government **Department of Energy**

memorandum

Idaho Operations Office

DATE: August 14, 1996

SUBJECT: Investigation of August 13, 1996, Electric Shock Accident at the Idaho National Engineering Laboratory, Test Reactor Area (OCS-CP&RA-96-091)

TO: J. R. Martin, Director
Center for Policy and Regulatory Assistance

Reference:

> Memo, T. O'Toole to J. M. Wilcynski, Subject: Investigation of the August 13, 1996, Electrical Shock Accident at the Idaho National Engineering Laboratory, Idaho, dated August 14, 1996

I hereby establish a Type A Accident Investigation Board to investigate the electric shock accident that occurred at the Idaho National Engineering Laboratory (INEL), Test Reactor Area on August 13, 1996. This Type A Accident Investigation Board is established in accordance with the August 14, 1996, memo from T. O'Toole (see Reference) and DOE 225.1, Accident Investigations.

The investigation will be a joint effort of the Office of the Assistant Secretary for Environment Safety and Health (DOE-EH) and the Idaho Operations Office (DOE-ID). It is anticipated that this approach will be mutually beneficial and serve the interests of DOE-EH and DOE-ID.

You are appointed as the Accident Board Chairperson. The board members will be R. J. Secondo, DOE-ID; M. R. Anderson, DOE-ID; J. W. Teske, DOE-EH; R. M. Sigler, DOE-EH; and L. E. Miller, DOE-NE. The board will be assisted by D. L. Vernon, DOE Accident Investigation Program Manager, and other personnel as needed.

The scope of the board's investigation will include, but is not limited to, identifying and analyzing the root causes and factors resulting in the accident, and determining judgements of need to prevent recurrence. The investigation will be conducted in accordance with DOE 225.1. The board will also focus on other recent electric shock incidents at the INEL, management roles and responsibilities, application of lessons learned from similar type accidents within the Department, and work planning, practices and procedures.

The board will provide DOE-EH and DOE-ID with periodic reports on the status of the investigation and not include any findings or arrive an any premature conclusions until an analysis of all the causal factors have been completed. Draft copies of the investigation report will be submitted to DOE-ID and Lockheed Idaho Technologies Company for factual accuracy review.

Copies of the accident investigation report should be forwarded to the Assistant Secretary of Environment Safety and Health and me no later than September 16, 1996. Discussions of the investigation and copies of the draft report will be controlled until authorization for release of the final report is obtained from me.

cc: T. P. Grumbly, US
D. W. Pearman, FM-1
T. J. O'Toole, EH-1
G. S. Podonsky, EH-2
A. L. Alm, EM-1
T. R. Lash, NE-1
L. E. Miller, NE-40
J. W. Teske, EH-24
R. M. Sigler, EH-24
D. L. Vernon, EH-21